14. INSTALLATION DRAWING

Air source rise:
0.5 ~ 0.7 MPa (5 ~ 7 kg/cm²), capacity 500 Nℓ/min or more,
PT3/8 screw

Electric power source rise:
Power capacity: MELDAS 55 kVA (60 kVA). The values in ( ) for a spindle motor of 18.5/22 kW
FANUC 51 kVA (57 kVA). The values in ( ) for a spindle motor of 18.5/22 kW.
Power cable size: over 60 mm² (80 mm²). The values in ( ) for a spindle motor of 18.5/22 kW.
Class 3 grounding work (100 Ω or less) with a cable of the same size as the power cable.

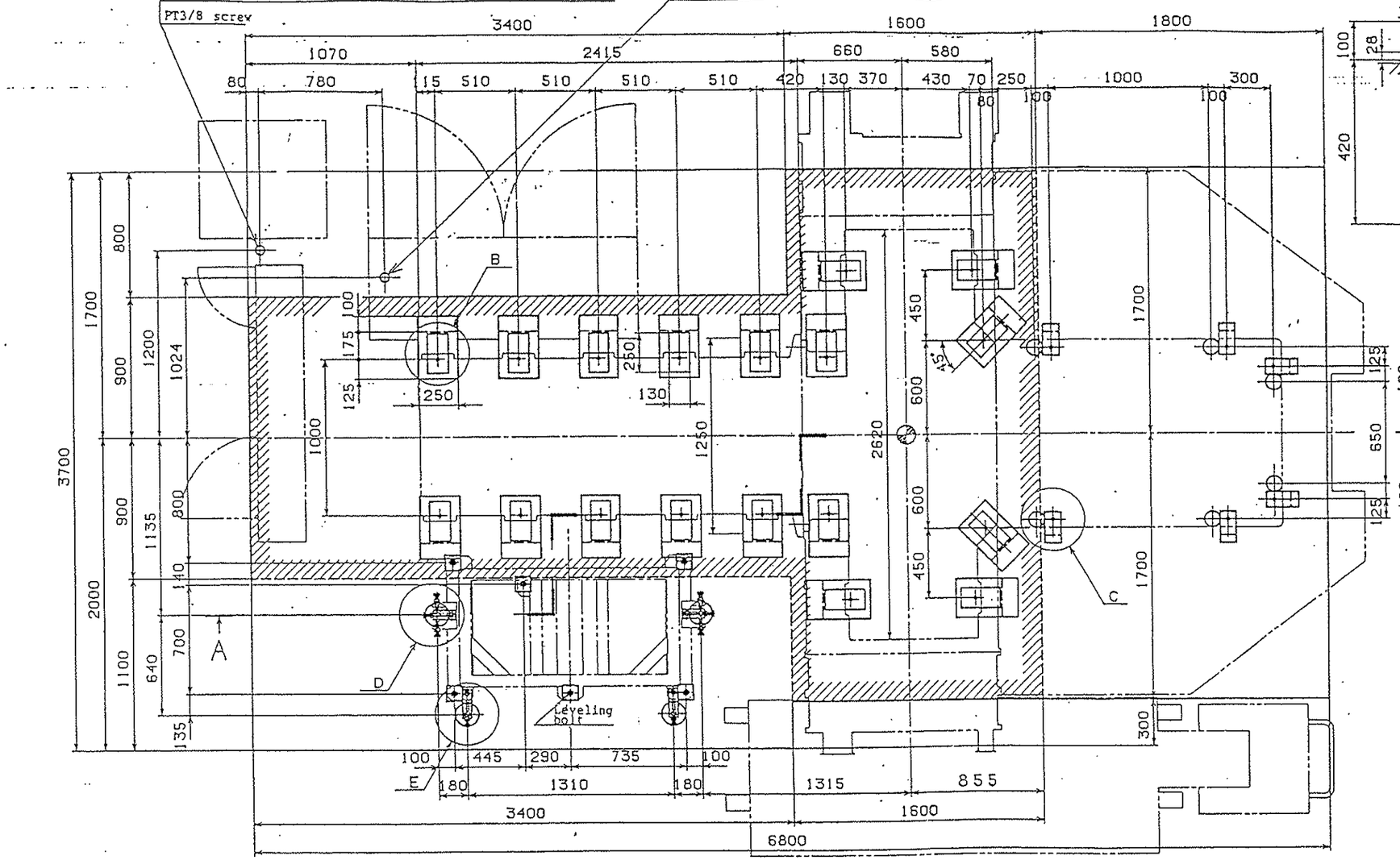

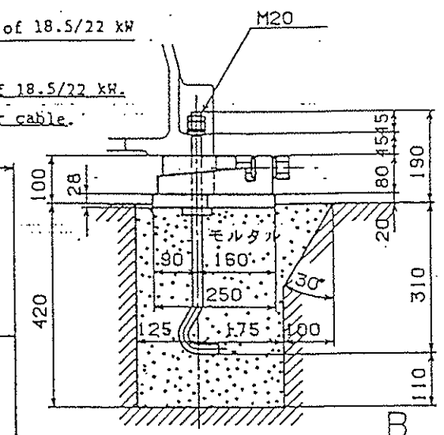

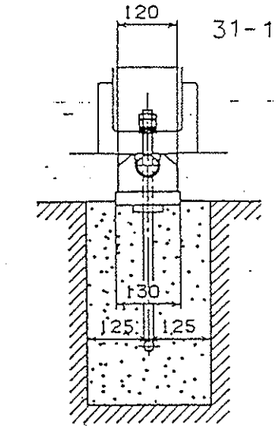

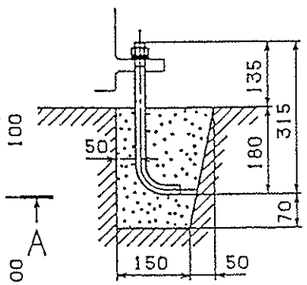

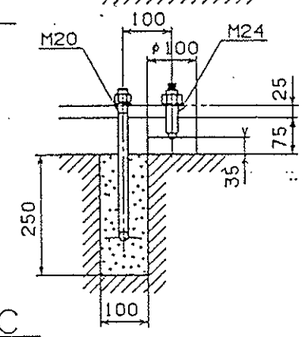

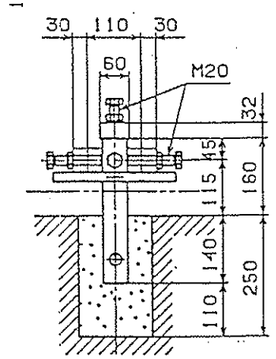

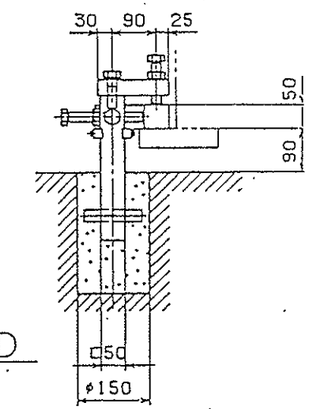

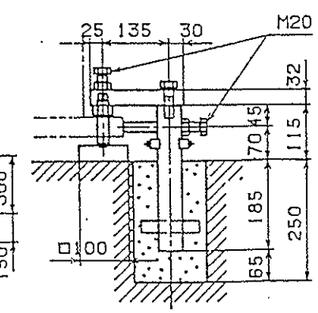

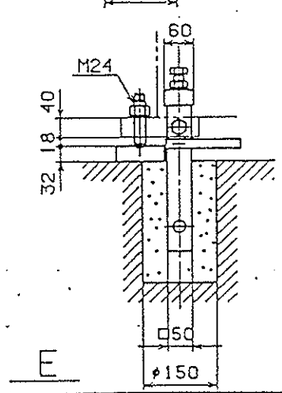

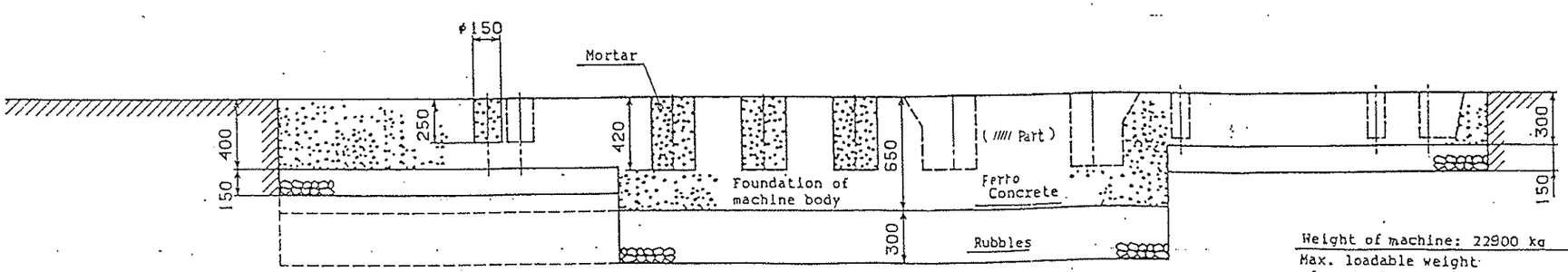

A — A

Weight of machine: 22900 kg
Max. loadable weight of work: 2000 kg

MCH1000-2	60MG SST 2APC (standard)	

8MU1565 890406 石塚 REF: M308K0041A
1: 30 MAM308100000A キソ