SURFACE FINISH	∼ (▽),(▽▽),(▽▽▽)

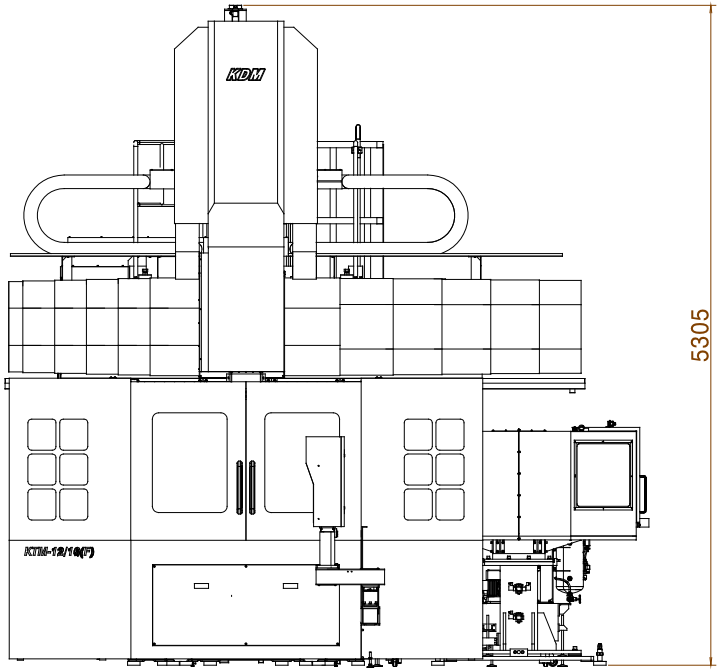

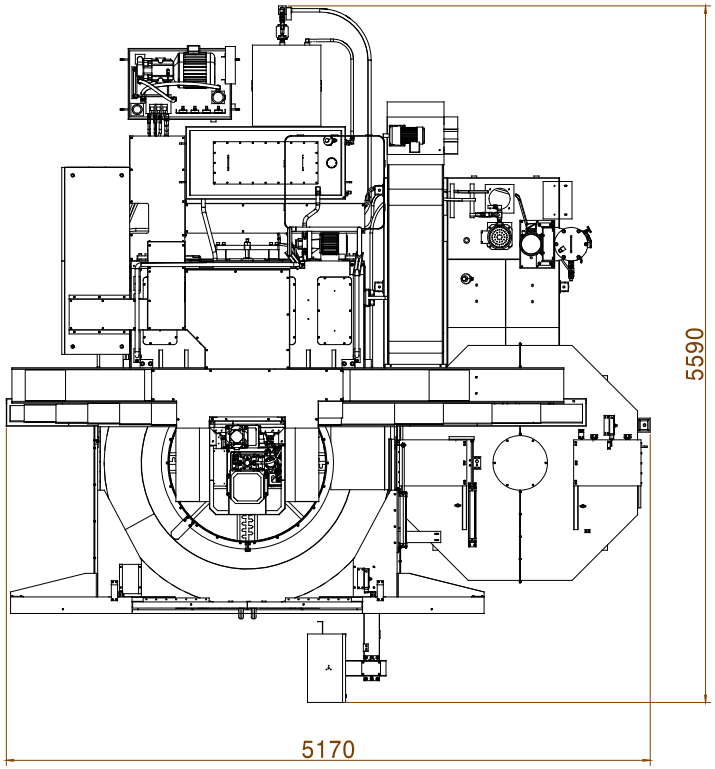

SUFFIX	MARK	SUBJECT	DATE	NAME	CHECKED

GENERAL TOLERANCE (MACHINING)	
- 6	±0.1
6 - 30	±0.2
30 - 120	±0.3
120 - 315	±0.5
315 - 1000	±0.8
1000 - 2000	±1.2
2000 - 4000	±2.0

APPROVED		MAT	N/A
CHECKED		Q'TY	1 SCALE 1/20
CHECKED		HEAT TREATMENT HARDNESS	H_RC N/A
DESIGNED	Who	HEAT TREATMENT METHOD	N/A
DRAWN	09.12.15	SURFACE TREATMENT	N/A

TITLE	V13 OVER VIEW		
ASS'Y	N/A	W.T (kg)	N/A
MODEL N/A	DRG. NO. A1	V13-00-0000	1 / 1
REF.DRG.NO N/A	KDM Korea Dream Machinery		